# SOLUCIÓN

## Problema 1

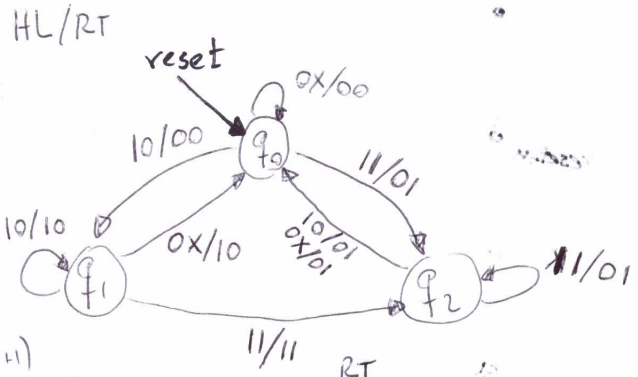


| q(t) \ HL | q(t+1) 00 | 01 | 11 | 10 | RT 00 | 01 | 11 | 10 |
|---|---|---|---|---|---|---|---|---|
| $q_0$ | $q_0$ | $q_0$ | $q_2$ | $q_1$ | 00 | 00 | 01 | 00 |
| $q_1$ | $q_0$ | $q_0$ | $q_2$ | $q_1$ | 10 | 10 | 11 | 10 |
| $q_2$ | $q_0$ | $q_0$ | $q_2$ | $q_0$ | 01 | 01 | 01 | 01 |

Observación: Dadas las salidas, ningún estado es compatible con el resto.
$\Rightarrow$ Es mínimo.

$q_0 \rightarrow 00$
$q_1 \rightarrow 01$
$q_2 \rightarrow 11$

| $y_1y_0$ \ HL | $D_1D_0$ 00 | 01 | 11 | 10 | RT 00 | 01 | 11 | 10 |
|---|---|---|---|---|---|---|---|---|
| 00 | 00 | 00 | 11 | 01 | 00 | 00 | 01 | 00 |
| 01 | 00 | 00 | 11 | 01 | 10 | 10 | 11 | 10 |
| 11 | 00 | 00 | 11 | 00 | 01 | 01 | 01 | 01 |

$D_1$

| $y_1y_0$ \ HL | 00 | 01 | 11 | 10 |
|---|---|---|---|---|
| 00 | 0 | 0 | 1 | 0 |
| 01 | 0 | 0 | 1 | 0 |
| 11 | 0 | 0 | 1 | 0 |
| 10 | X | X | X | X |

$D_1 = HL$

$D_0$

| $y_1y_0$ \ HL | 00 | 01 | 11 | 10 |
|---|---|---|---|---|
| 00 | 0 | 0 | 1 | 1 |
| 01 | 0 | 0 | 1 | 1 |
| 11 | 0 | 0 | 1 | 0 |
| 10 | X | X | X | X |

$D_0 = HL + \bar{y}_1 H$

$R$

| $y_1y_0$ \ HL | 00 | 01 | 11 | 10 |
|---|---|---|---|---|
| 00 | 0 | 0 | 0 | 0 |
| 01 | 1 | 1 | 1 | 1 |
| 11 | 0 | 0 | 0 | 0 |
| 10 | X | X | X | X |

$R = \bar{y}_1 y_0$

$T$

| $y_1y_0$ \ HL | 00 | 01 | 11 | 10 |
|---|---|---|---|---|
| 00 | 0 | 0 | 1 | 0 |
| 01 | 0 | 0 | 1 | 0 |
| 11 | 1 | 1 | 1 | 1 |
| 10 | X | X | X | X |

$T = y_1 + HL$

# SOLUCIÓN

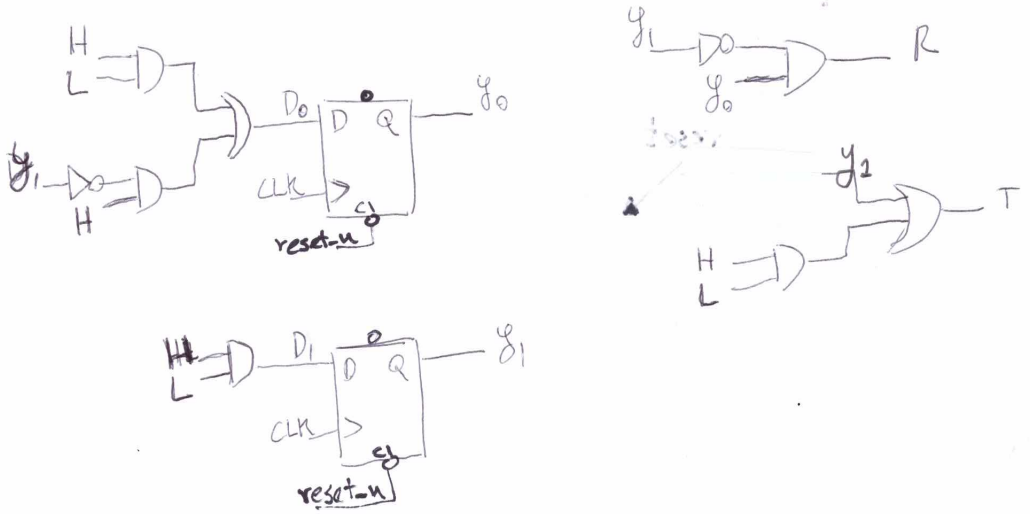
H
L
$y_1$
H
$D_0$
D
Q
$y_0$
CLK
CL
reset_n
$y_1$
$y_0$
R
$y_1$
T
H
L
H
L
$D_1$
D
Q
$y_1$
CLK
CL
reset_n

# SOLUCIÓN

## Ejercicio 1

| | 00 | 01 | 11 | 10 | 00 | 01 | 11 | 10 |
|---|---|---|---|---|---|---|---|---|
| a | a | a | a | d | 1 | 1 | 0 | |
| b | a | b | c | X | | 0 | | |
| c | d | a | c | c | | | 1 | 0 |
| d | d | b | c | d | 0 | | | 1 |

| | | | |
|---|---|---|---|
| b | X | | |
| c | X | ~~a-d~~ ~~b-a~~ | |
| d | X | X | X |
| | a | b | c |

⟹ No se minimiza.

### Conjuntos destino

| 00 | 01 | 11 | 10 |
|---|---|---|---|
| (a, b) ✓ | (a, c) ✓ | (a) | (c) |
| (d, c) ✓ | (b, d) ✓ | (c, b, d) ✗ | (d, a) ✗ |

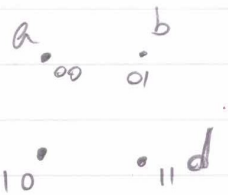


■ Adyacencias que se verifican
■ Adyacencias que no se verifican.

- Para solucionar b→c, podemos usar el estado "d": b→d→c

- Para solucionar a→d, podemos usar el "don't care" del estado "b", implementando a→b→d

| | 00 | 01 | 11 | 10 | 00 | 01 | 11 | 10 |
|---|---|---|---|---|---|---|---|---|
| a | a | a | a | b | 1 | 1 | 0 | 1 |
| b | a | b | d | d | X | 0 | X | 1 |
| c | d | a | c | c | 0 | 1 | 1 | 0 |
| d | d | b | c | d | 0 | 0 | 1 | 1 |

■ Modificaciones

■ Solución de espúreos.

# SOLUCIÓN

## Ejercicio 2

(a) A = -256  B = -53  C = 135

Para poder representar A, B y C consideramos el peor caso, es decir, A.

Si r = 8 bits ⟹ El rango es -128 a 127
Si r = 9 bits ⟹ El rango es -256 a 255

A partir de 9 bits podemos representar A, B y C.

$\boxed{A = 1\,0000\,0000}$

B = -53

B' = -B = 53 ⟶ 0 0011 0101

Not bit a bit ⟶ 1 1100 1010 ⟶ Desplazamiento

1 1100 1010
1
1 1100 1011

$\boxed{B = 1\,1100\,1011}$

$\boxed{C = 0\,1000\,0111}$ ⟶ Not bit a bit 1 0111 1000 ⟶ desplazo 1 0111 1001

$\boxed{-C = 1\,0111\,1001}$

(b) F = A + B

Gout Gin

+ 1 0000 0000
  1 1100 1011
1 $\boxed{0\,1100\,1011}$

Resultado no válido  Gin ≠ Gout

G = B - C

Gout Gin

+ 1 1100 1011
  1 0111 1001
1 $\boxed{1\,0100\,0100}$ Resultado válido  Gin = Gout

# SOLUCIÓN

## Problema 2

SECUENCIA

MODULE: EJ_RTL
INPUT: Serie, Ena
OUTPUT: PARA[8], Busy
MEMORY: Cont[3], Mem[8], Msk[8]

**0.** Cont [2..0] ← 001
Mem[7..0] * Ena ← Serie, Mem[7..1]
Busy = Ena
Msk[7..0] □← 0
□ (Ena ; /Ena) / (1, 0)

**1.** Cont[2..0] □← INC (Cont[2..0] )
Mem[7..0] ←□ Data, Mem[7..1]
Busy = 1
Msk □← /Ena, Msk[7..1]
□ (/(Cont=111) ; (Cont=111) ) / (1, 2)

**2.** Mem[7..0] ←□ Mem[7..0] + Msk[7..0].Serie
Busy = Ena
□(0)

END SEQUENCE
CONTROL RESET (0)
Data = Serie . Ena
PARA[7..0] = Mem[7..0]
END

FACULTAD DE INGENIERIA
UNIVERSIDAD DE LA REPUBLICA

DISEÑO LÓGICO
DICIEMBRE 2019

# SOLUCIÓN

## BLOQUE DE CONTROL

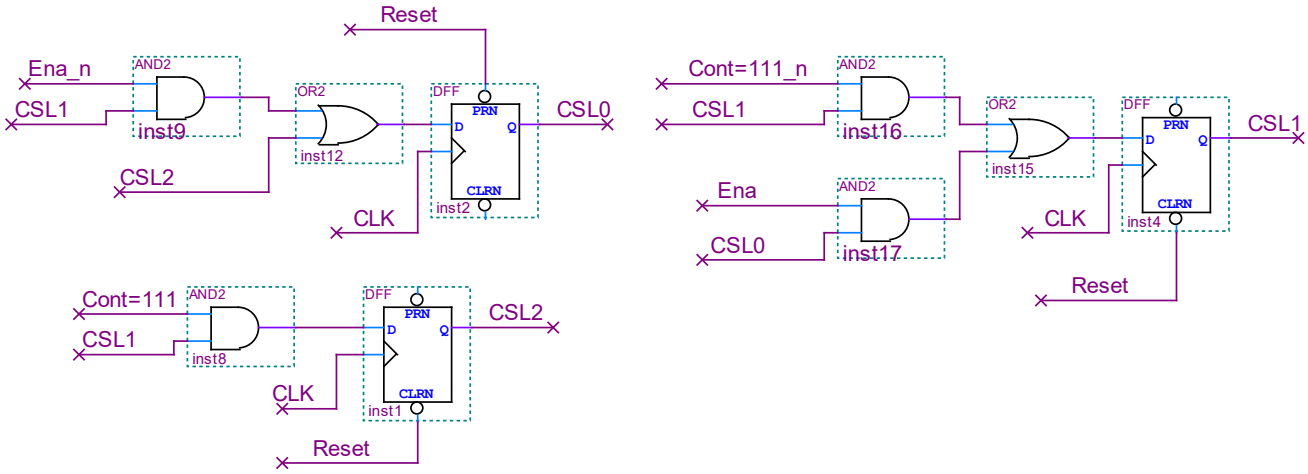

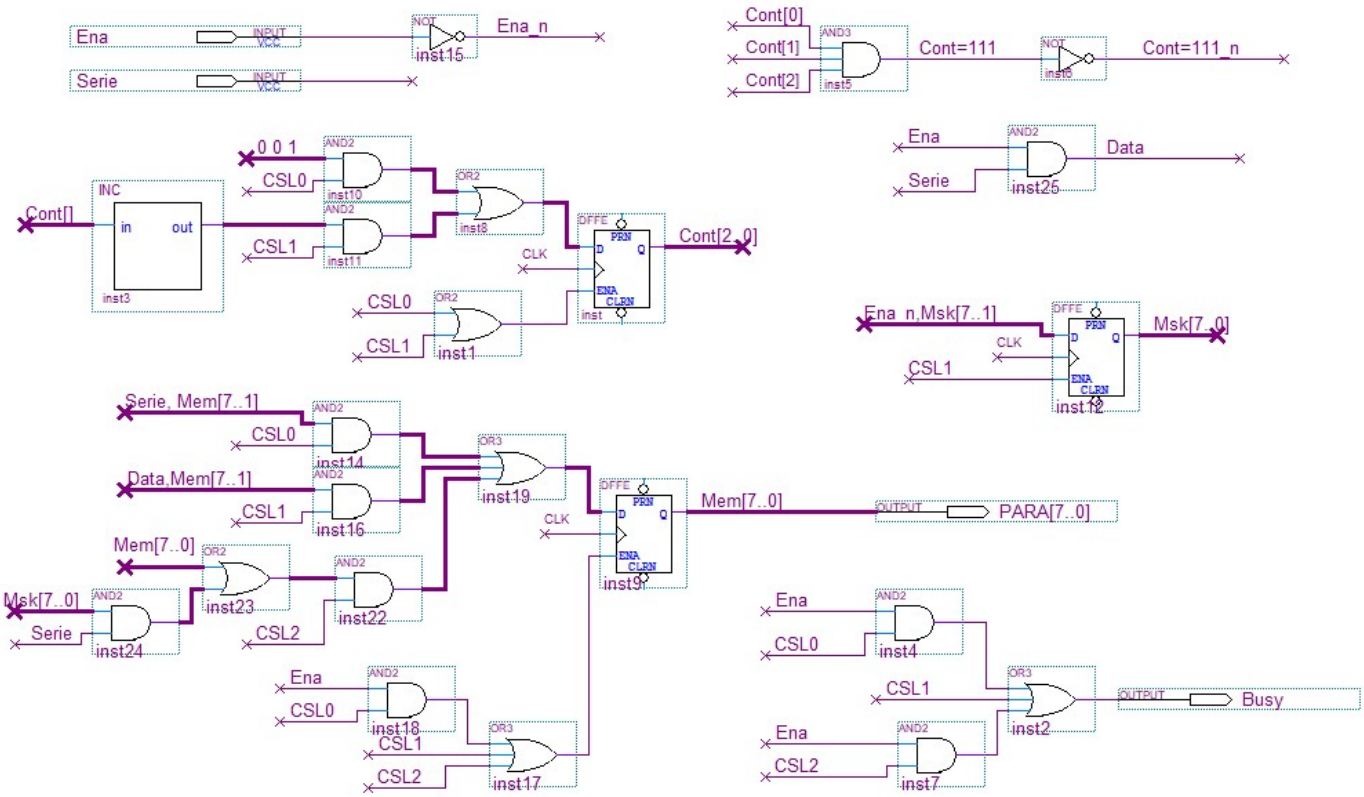
## BLOQUE DE DATOS