Examen de Electrónica de Potencia - Diciembre 2017

Problema 1

a)

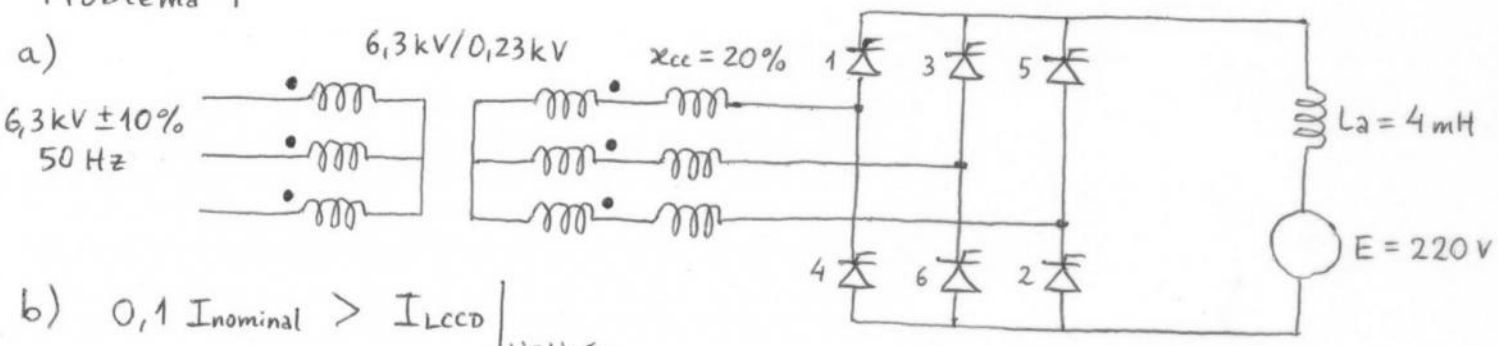

b) $0{,}1\, I_{nominal} > I_{LCCD}\Big|_{U=U_{máx}}$

$$\Rightarrow 0{,}1\left(\frac{P_{nominal}}{E}\right) > \frac{1}{8}\cdot\frac{U_{máx}}{(L+L_a)\,\omega}\sin(\alpha_o)$$

$$E = U_d = \frac{3}{\pi}\sqrt{2}\,U_{máx}\cos(\alpha_o) - \cancel{\frac{3}{\pi}X_{cc}\,I} \qquad \Rightarrow \alpha_o = \cos^{-1}\left(\frac{(220\,V)}{\frac{3}{\pi}\sqrt{2}\,(230\,V)(1{,}1)}\right) = 50^\circ$$

desprecio efecto de la conmutación

$$\Rightarrow L+L_a > \frac{1}{8}\cdot\frac{U_{máx}}{\left(0{,}1\,\frac{P_{nominal}}{E}\right)\omega}\cdot\sin(\alpha_o)$$

$$L+L_a > \frac{1}{8}\cdot\frac{(230\,V)(1{,}1)}{\left(0{,}1\,\frac{(20\,kW)}{(220\,V)}\right)2\pi\,(50\,Hz)}\sin(50^\circ) = 8{,}5\,mH \quad \Rightarrow$$

Es necesario agregar

$$\boxed{L > 4{,}5\,mH}$$

c) $S_{máx} = \sqrt{3}\,U_{máx}\,I_{eff_{máx}} = \sqrt{3}\,U_{máx}\left(\sqrt{\frac{2}{3}}\,I_{nominal}\right)$ → valor eficaz de onda cuasi-cuadrada (desprecio efecto de la conmutación)

$$\Rightarrow S_{máx} = \sqrt{3}\,(230\,V)(1{,}1)\sqrt{\frac{2}{3}}\left(\frac{20\,kW}{220\,V}\right) = \boxed{32{,}5\,kVA}$$

d) $E = U_d = \frac{3}{\pi}\sqrt{2}\,U_n\cos(\alpha_i) - \frac{3}{\pi}X_{cc}\,I_{nominal}$ $\left(\text{por letra}\begin{cases}U = U_n\\ I = I_{nominal}\end{cases}\right)$

$$X_{cc} = 0{,}2\,\frac{(230\,V)^2}{(32{,}5\,kVA)} = 325\,m\Omega$$

$$\alpha_i = \cos^{-1}\left(\frac{E + \frac{3}{\pi}X_{cc}I_{nominal}}{\frac{3}{\pi}\sqrt{2}\,U_n}\right) = \cos^{-1}\left(\frac{(220\,V) + \frac{3}{\pi}(325\,m\Omega)\left(\frac{20\,kW}{220\,V}\right)}{\frac{3}{\pi}\sqrt{2}\,(230\,V)}\right) = \boxed{37^\circ}$$

$$\cos(\alpha_i) - \cos(\alpha_i + \mu_i) = \frac{2\,X_{cc}I_{nominal}}{\sqrt{2}\,U_n} \quad \Rightarrow \mu_i = \cos^{-1}\left(\cos(\alpha_i) - \frac{2\,X_{cc}I_{nominal}}{\sqrt{2}\,U_n}\right) - \alpha_i$$

$$\mu_i = \cos^{-1}\left(\cos(37^\circ) - \frac{2\,(325\,m\Omega)\left(\frac{20\,kW}{220\,V}\right)}{\sqrt{2}\,(230\,V)}\right) - 37^\circ = \boxed{15^\circ}$$

$$\begin{cases}\gamma_f = \alpha_i\\ \mu_f = \mu_i\end{cases} \quad \Rightarrow \mu_f = \boxed{15^\circ}$$

$$\alpha_f = 180^\circ - \mu_f - \gamma_f = 180^\circ - 15^\circ - 37^\circ = \boxed{128^\circ}$$

Examen de Electrónica de Potencia - Diciembre 2017

e)

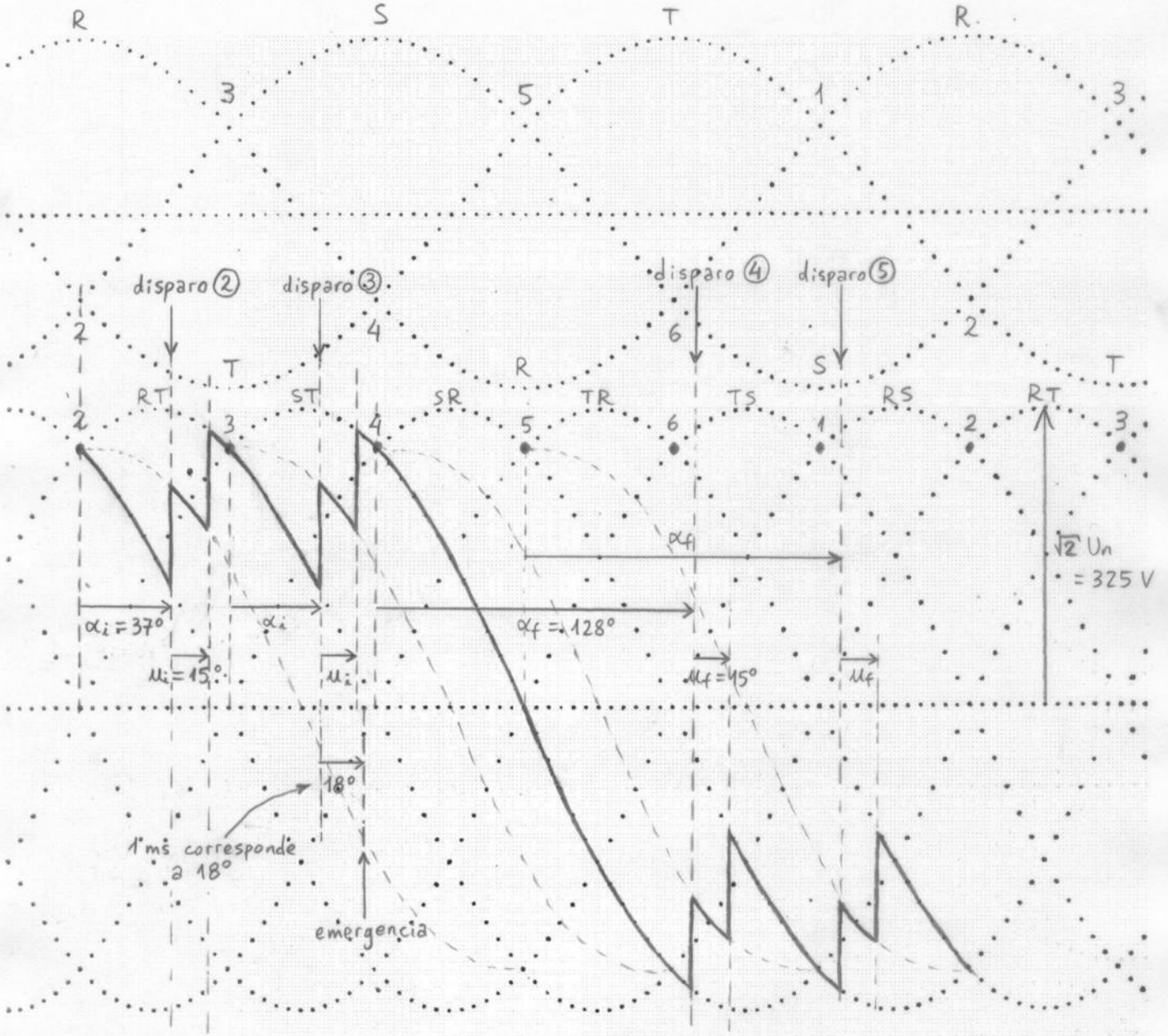

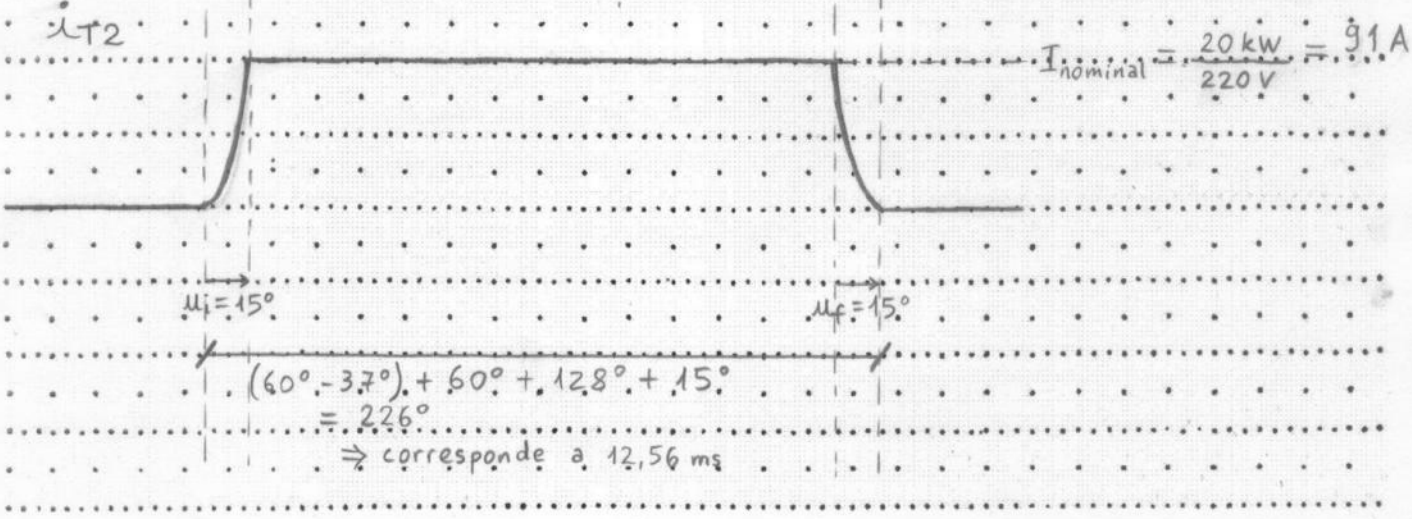

Examen de Electrónica de Potencia - Diciembre 2017

f) De la hoja de datos: $T_{jmáx} = 125\,°C$

$r_T = 2{,}40\ m\Omega$

$V_T = 0{,}80\ V$

$R_{\theta jc} = 0{,}270\ °C/W$ (por tiristor)

$R_{\theta cs} = 0{,}1\ °C/W$ (por módulo)

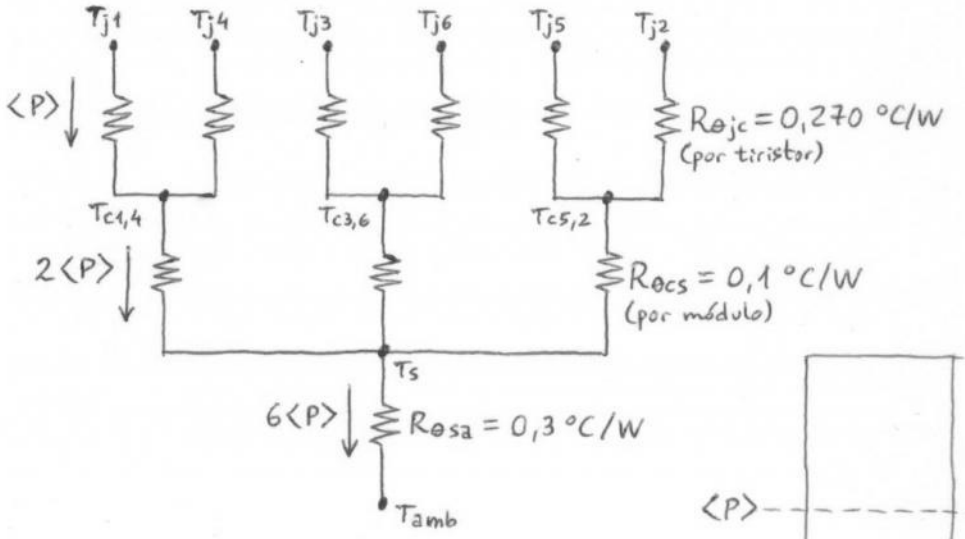

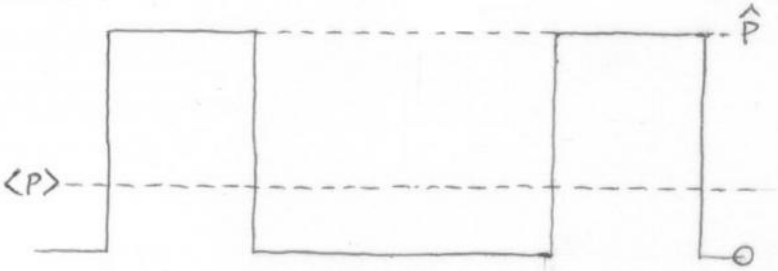

$$\hat{P} = \left(V_T + r_T I_{nominal}\right) I_{nominal}$$

$$\langle P \rangle = \frac{\hat{P}}{3} = \frac{1}{3}\left((0{,}80\,V) + (2{,}40\ m\Omega)\left(\frac{20\,kW}{220\,V}\right)\right)\left(\frac{20\,kW}{220\,V}\right) = 31\ W$$

$$T_{jmáx} = T_{amb} + \langle P \rangle \left(R_{\theta jc} + 2R_{\theta cs} + 6R_{\theta sa}\right) + \langle P \rangle \left(2Z_{\theta jc}(32{,}56\,ms) - 3Z_{\theta jc}(25{,}89\,ms) + 3Z_{\theta jc}(12{,}56\,ms)\right)$$

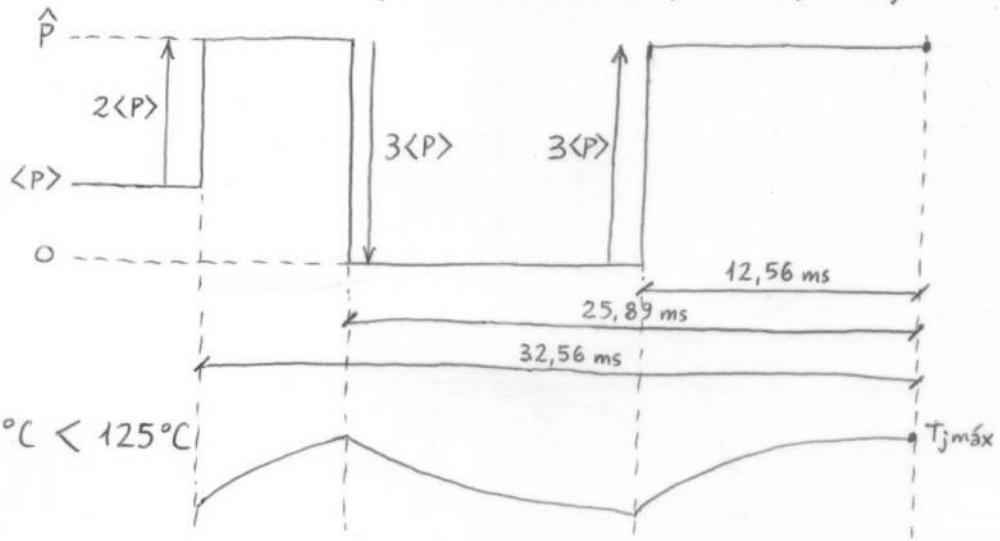

De la hoja de datos:

$Z_{\theta jc}(32{,}56\,ms) = 0{,}11\ °C/W$

$Z_{\theta jc}(25{,}89\,ms) = 0{,}095\ °C/W$

$Z_{\theta jc}(12{,}56\,ms) = 0{,}06\ °C/W$

$$T_{jmáx} = T_{amb} + 70°C + 3{,}5°C < 125°C$$

$$\Rightarrow T_{amb} < 51{,}5°C$$

$$\boxed{T_{amb\,máx} = 51{,}5°C}$$